EUREKO GREEN

Installation instructions for roofing EUREKO GREEN

EUREKO GREEN is a modern plastic roofing material with the function of conventional folded roofing material and at the same time acts as a container for green roof. EUREKO GREEN is designed for pitched roofs from 5° to 45°. It is laid on a **roof slat** with a size of 6x4cm. Despite the low weight of the roofing itself (about 10 kg/m2), it is necessary to remember that the roofing is designed for water retention and as a support for the green roof and as such can reach a weight of up to 120 kg/m2. In the case of a static calculation, it is therefore necessary to consider this total maximum weight of the roofing.

Laying is always carried out using high-quality waterproofing film. The type of foil depends on the composition of the roof cladding and the recommendations of the implementing company. When laying, we proceed from the **bottom up** and from the **left to the right** as with other roofing materials. Laying is always carried out using a high-quality waterproofing film. The roofing does not smell, does not contain any harmful substances and does not react negatively to any impregnations, copper, acid rain, etc. The **warranty** for frost resistance and water-impermeability of the roofing is **30 years** see warranty conditions for www.eureko.org.

A detailed **description** of the roofing is shown on **Figure 1 a 2**:

Fig. 1

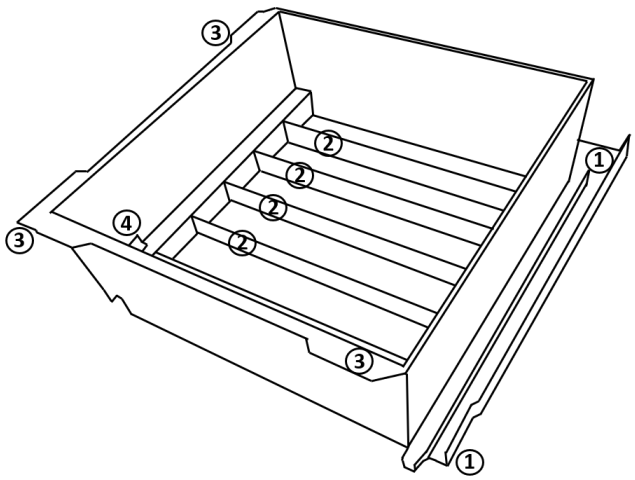

Fig. 2

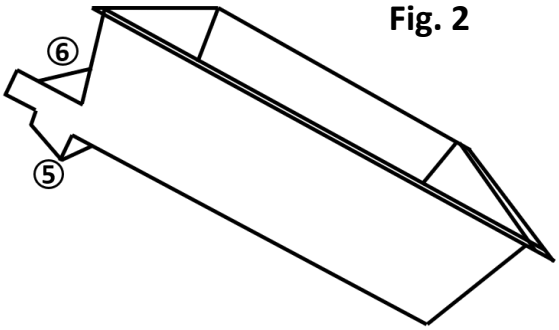

1. **Drainage groove**
2. **Water barrier**
3. **Lock with overlap**
4. **Drainage (drain to groove)**
5. **Anchoring behind the slat**
6. **Safety overlap**

Laying

Row measurement

The slats have a fixed and unchangeable distance of **34.5 cm**. This distance cannot be adjusted in any way see. Fig. 3. The first slat is then 25 cm away and is supported by 7 mm, as a support for the lower part of the first row.

Fig. 3

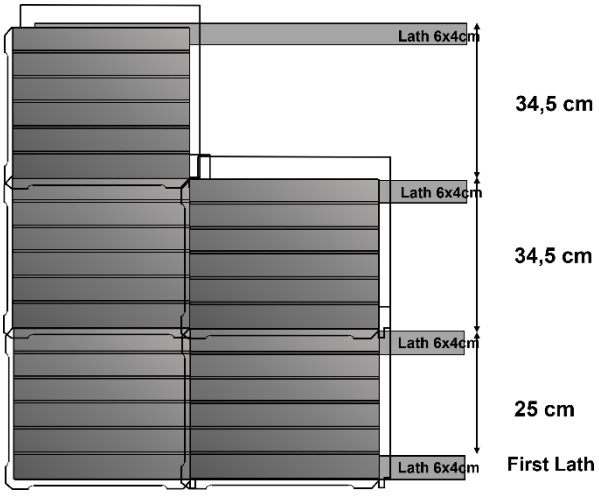

Anchoring

Each slat has its own anchoring behind the slat (Fig. 2, point 5). At the same time, it is inserted into the lock with an overlap into the adjacent tiles. (Fig. , point. 3). Laying without anchoring is sufficient for standard roofs, due to the weight of the roofing.

EUREKO GREEN

Composition and safe slope

EUREKO GREEN roofing is designed for pitched roofs, i.e. roofs where there is a sufficient slope for water drainage. The **classic composition** of roofing, i.e. diffusion foil, counter-slats, slats, roofing, is designed for **common slopes** of pitched roofs from **15° - 45°.** In the case of less than 15° (i.e. 5°-15°) slope, we recommend creating a waterproof base.

Plumbing elements

The leeward slat on both the right and left sides will be different. The slat on the left side must comprise of two parts. Since it is not possible to cut the tiles in half, it is always necessary to calculate the tiles so that the left and right edges maintain the same free space for plating. (Slat length /34,5 cm, rounded to the whole tile). The remaining space will always be less than 34,5/2 = 17,25cm.

First, **part A** is fixed which ensures the drainage of excess water from the contents of the container to the eaves edge. After the pattern is established, **part B** is subsequently fixed to this part. Part A is mounted only on the left side of the leeward slat, because the left row has drainage in this place. On the right side of the leeward slat, part A is not

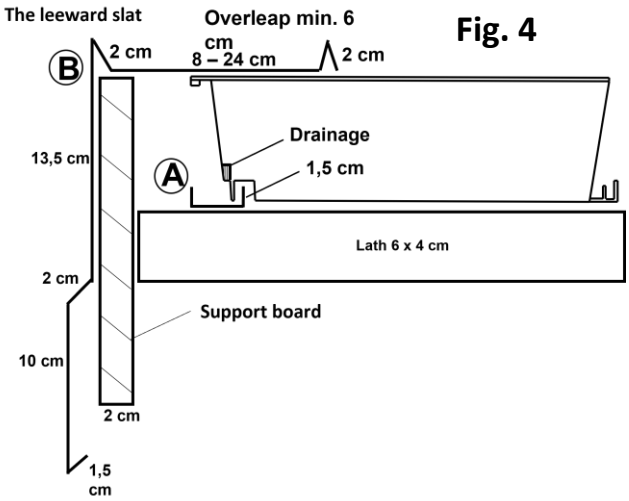

Fig. 4

Fig. 5

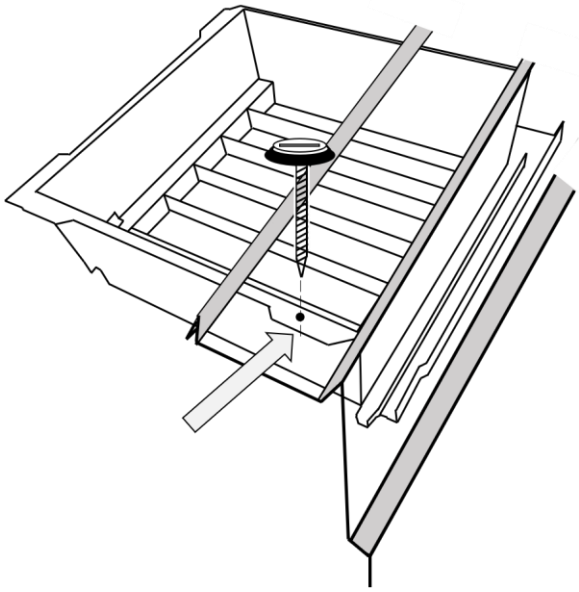

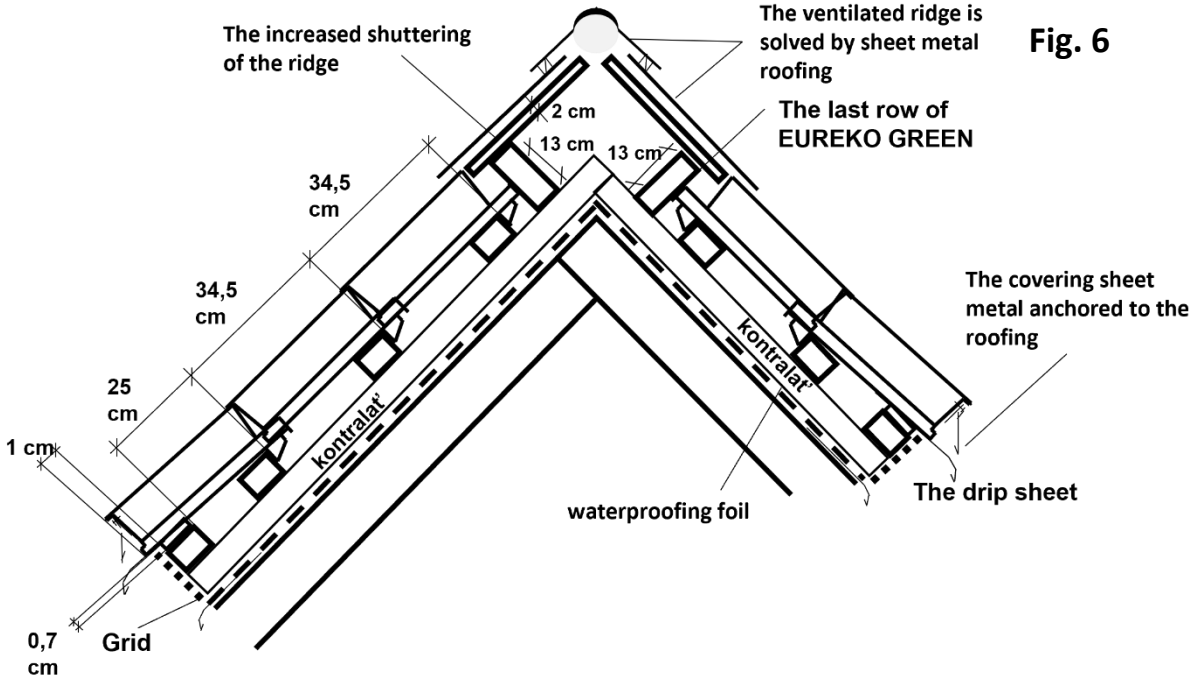

Fig. 6

used. . To strengthen the stability of the sheet, we can anchor wide upper sheet directly into the roofing. Complete this with a self-tapping stainless steel screw with a washer in place of the reinforced roofing lock (fig. 5).

Ridge

Because **EUREKO GREEN cannot be shortened**, the gap between the last row of GREEN and the ridge is always different. Make the end of the roofing in the ridge with a sheet metal covering with a ventilated ridge. Due to the high profile of EUREKO GREEN roofing, it is necessary to increase the slats/ shuttering so that the sheet metal covering can cover the green roof with sufficient overlap (min. 6 cm). A detail of the slats and ridge is shown in Fig. 5. The construction of the slats (or shuttering) for the ridge must be 15 cm from the counter-slat.

Weatherboard

A closer look at the roofing material reveals that water is draining from the roof in two places. From the upper edge of the covering and also from the water groove, as indicated in Fig. 7. Both of these drainage points have a very small overlap, and therefore it is advisable to underlay the roofing with the main drip sheet so that water leads **directly into the gutter.** The **sheet metal cover slat** leads water from vegetation into the gutters and at the same time fulfils an aesthetic function by visually covering the outlet of the water grooves into the gutter edge. It is anchored directly into the roofing. The upper part of the cover strip is inserted under the roofing lock and fixed with a stainless steel screw with a washer.

Fig. 7

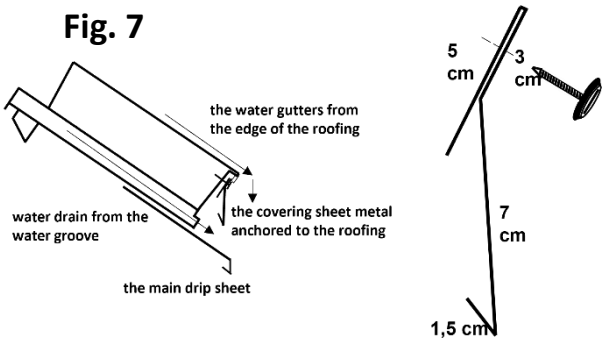

Roofing accessories

Roofing should be laid in uninterrupted rows to maintain proper water drainage. **Roofing cannot be omitted**, for example, due to the installation of conducts. This accessory **must be installed** directly **in** one of the **EUREKO GREEN** tiles, where it must be sufficiently sealed due to water penetration. For this purpose, we **remove the ribs for water retention**, and the passage should be as small as possible and sufficiently insulated. Cover the **top of the GREEN tile** (e.g. with sheet metal, permeable O/N tile, etc.) and minimize the flow of water into the pattern.

Roof windows, chimneys and other obstacles to a complete roof must be solved individually. Consult these details with the implementation company.

Fig. 8

We install the passage directly into the GREEN tile

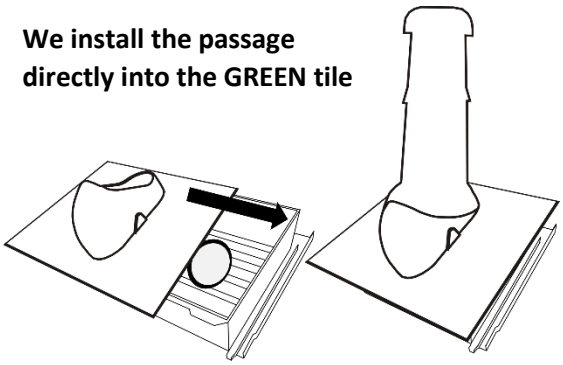

Extensive green roof

EUREKO GREEN has internal dimensions of about 33 x 33 cm and a height of about 11 cm. It is designed for extensive green roof. It can be filled with a combination of substrate and hydrophilic material, but also only with the help of the substrate itself. **The composition of the EUREKO GREEN content affects the weight and amount of water retained** The table below shows EUREKO GREEN filled only with **substrate for extensive green roofs** (11 cm high). The mass of this composition at full saturation with water will vary depending on the slope, as shown in Table 1.

Tab. 1 Maximum weight and water retention according to the slope

Slope	5°	45°
Retained water/m2	39l	29l
Max. weight/m2	120kg	110kg

Types of stonecrop plants

When laying on sloping roofs above 15°, we use **stonecrop plants with a deeper root system.** For example, pale stonecrop, evergreen stonecrop, or Caucasian stonecrop. Not all types of stonecrops thrive on a sloping roof. Very effective is the use of suitable stonecrop carpets or growing EUREKO GREEN before laying on the roof. Subsequently, the already existing vegetation and root system will facilitate irrigation and quick attachment to the roof.

Anchor clamp

In places of strong wind, wind suction stress or in the case of a larger slope, we can use stainless steel clamps that attach the tiles more tightly to the slat behind which it is anchored. This **clamp is applied to the left part** (point 6, fig. 2) of **safety overlap** as shown in Fig. 9 and 10. In this way, the tile is always attached to the right of the clamp, except for the last tile in the row. It must be fixed with the last clamp, curved to the left (Fig. 11). If the buckle cannot be threaded under the slat due to the **counter-slat, bend the lower part** so that it also lies on the counter-slat and fasten with a nail or screw in a pre-prepared place, as shown in Fig. 12.

Fig. 9

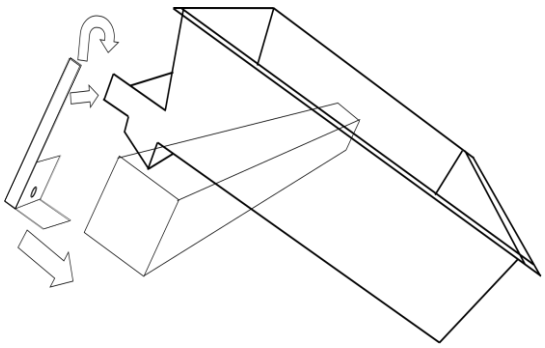

Fig. 10

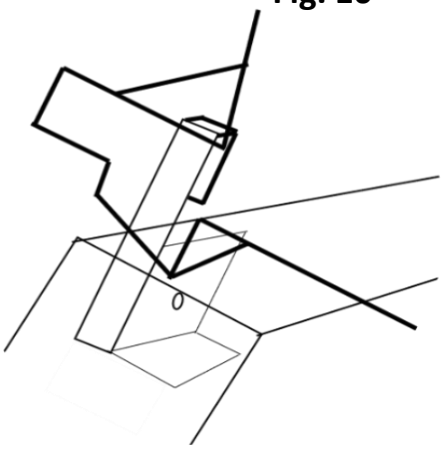

Fig. 11

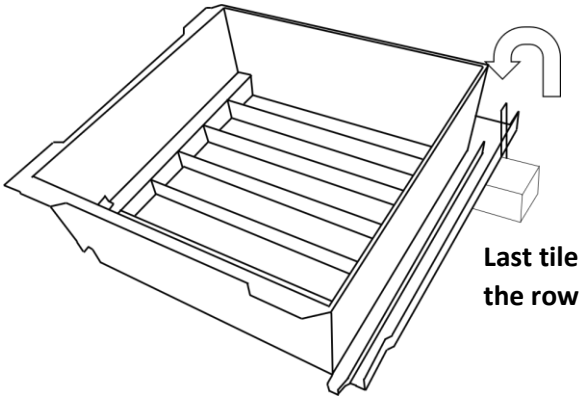

Last tile in the row

Fig. 12

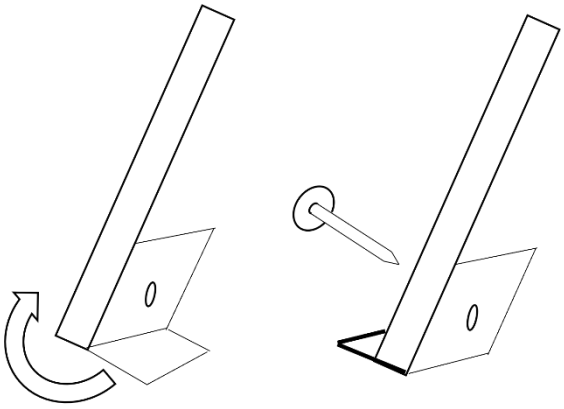

Bend the bottom sheet and then anchor into the prepared hole